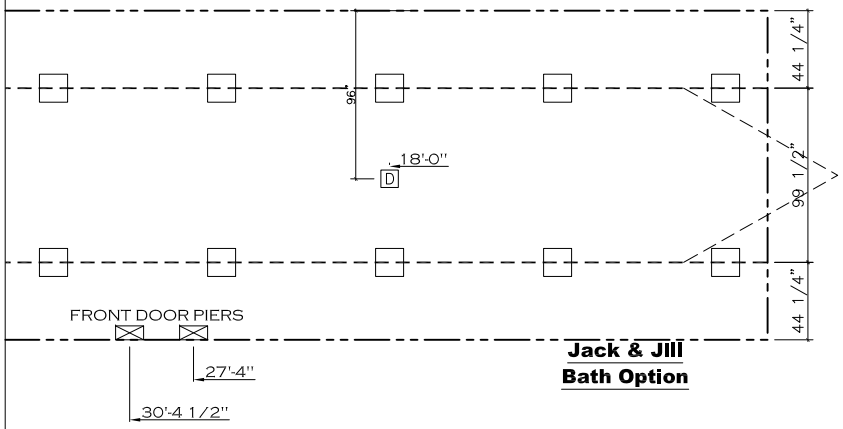

Jack & Jill Bath Option

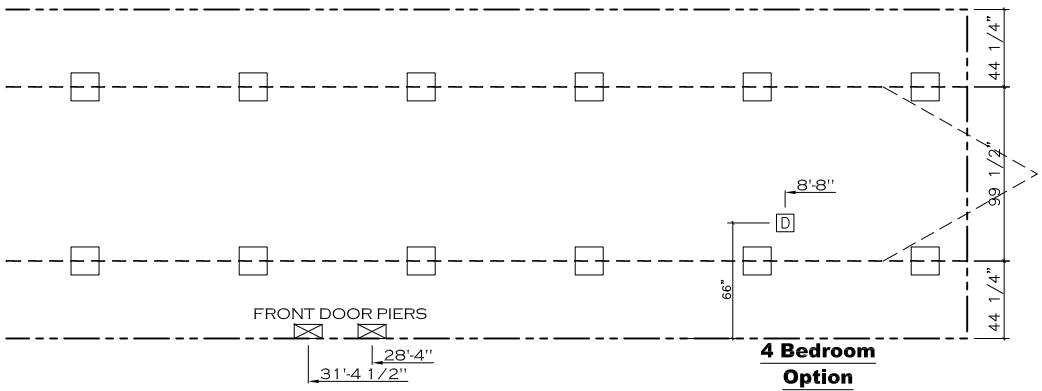

4 Bedroom Option

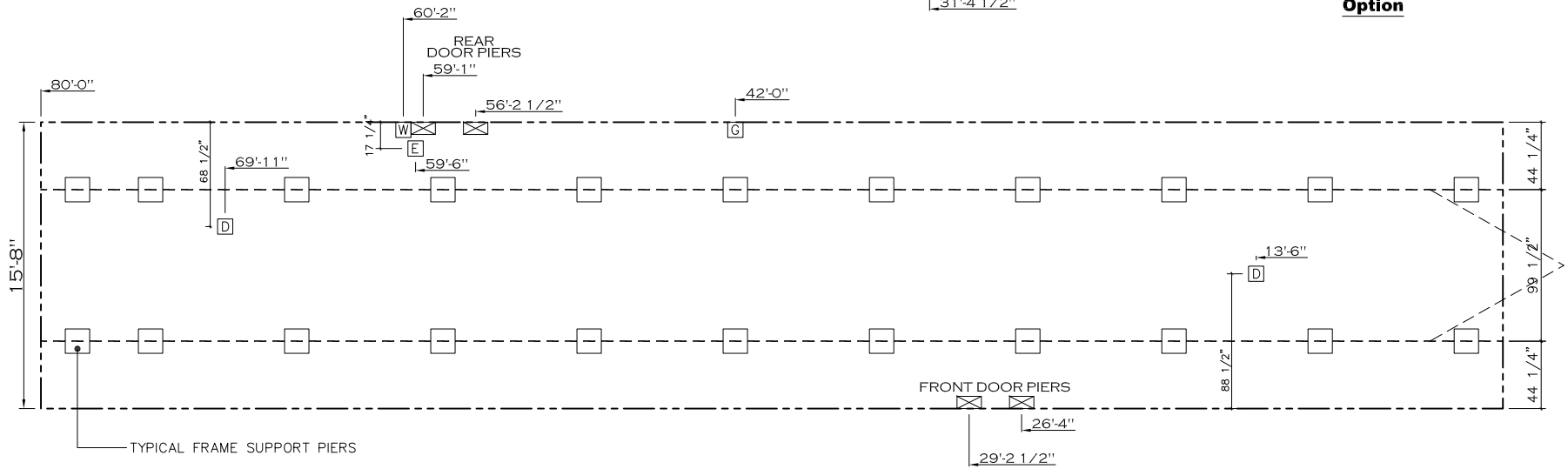

NOTES:

1. REFER TO TABLES 6 AND 6a IN THE INSTALLATION MANUAL FOR LOAD ON FRAME PIER FOOTINGS FOR HOMES THAT DO NOT REQUIRE PERIMETER BLOCKING. REFER TO TABLES 7 AND 7a IN THE INSTALLATION MANUAL FOR LOAD ON FRAME PIER FOOTINGS FOR HOMES THAT REQUIRE PERIMETER BLOCKING. REFER TO TABLES 10 AND 10a TO DETERMINE FOOTING SIZE FOR ALL PIERS.
2. REFER TO TABLE 9 FOR PIER CONFIGURATION AND MAXIMUM ALLOWABLE HEIGHTS. CROSS REFERENCE THE PIER HEIGHT WITH THE MAXIMUM ALLOWABLE FLOOR HEIGHT LISTED IN THE FRAME TIEDOWN CHARTS (TABLE 18, 19, AND 20).
3. THE MAXIMUM SPACING FOR FRAME SUPPORT PIERS FOR 8" I-BEAMS IS 8 FEET, 10" & 12" I-BEAMS IS 10 FEET.
4. SERVICE DROP LOCATIONS IDENTIFIED ARE APPROXIMATE.
5. FLOOR WIDTH SHOWN IS FOR STANDARD PRODUCT ONLY. CONTACT THE MFG FACILITY FOR SPECIFICATIONS OF OPTIONS ORDERED.

20 lb ROOF LOAD SIDEWALL OPENING PIER LOAD 16' BOX WIDTH	SIDEWALL OPENING (FT) REQUIRED PIER LOAD (LBS)					
	3	4	5	6	8	10
	1244	1413	1581	1750	2088	2425

*FOR 30 lb & 40 lb ROOF LOAD REFER TO TABLES 7 & 7a IN THE INSTALLATION MANUAL.

SERVICE DROP LEGEND
E = ELECTRICAL DROP
W = WATER INLET
D = DWV PLUMBING DROP
G = GAS INLET

PIER LEGEND
☐ = PIER MAIN BEAM
⊠ = PIER PERIMETER
■ = PIER PORCH/RECESSED ENTRY

1,400 SQ.FT. (STD PLAN "CONDITIONED")
N/A SQ.FT. (W/OPT. PORCH/RECESS "CONDITIONED")

CMH MANUFACTURING	Model #: YES16803C	Drawing #:
	Date: 12.13.13 Scale: N.T.S.	355223
Product Designer: Jeremy Huiting	16 x 80 Yes The Boss	
FRAME PIERS		